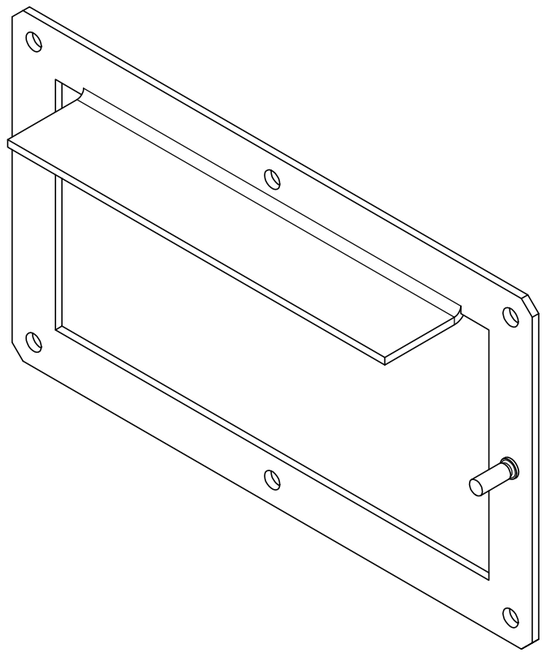

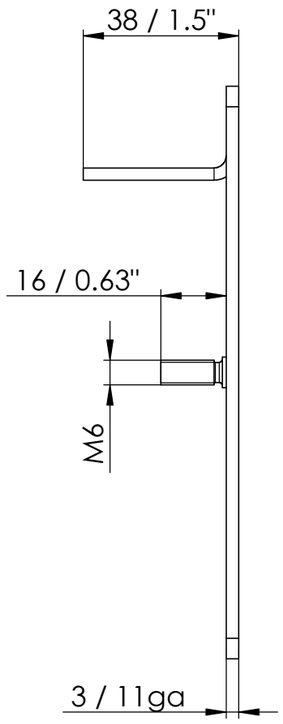
38 / 1.5"
16 / 0.63"
M6
3 / 11ga

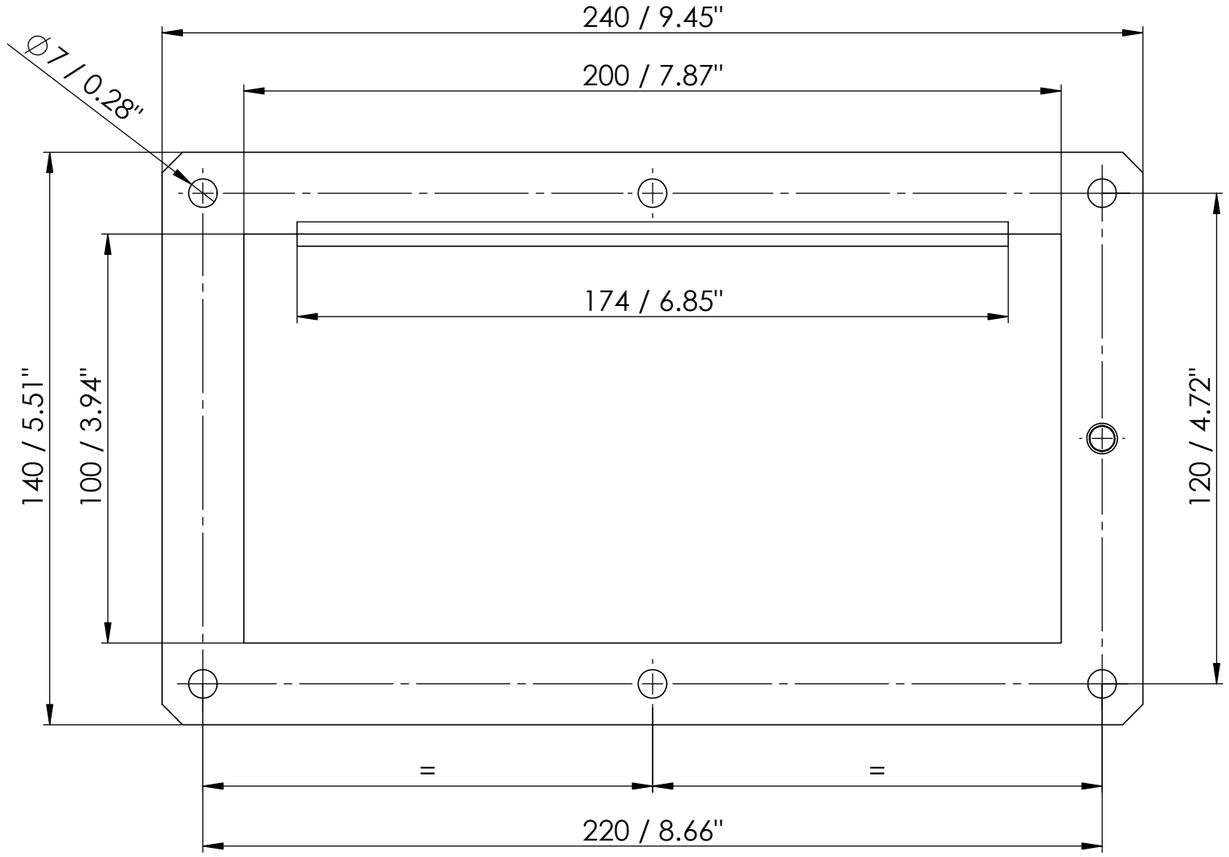
240 / 9.45"
200 / 7.87"
Ø7 / 0.28"
174 / 6.85"
140 / 5.51"
100 / 3.94"
120 / 4.72"
=
=
220 / 8.66"